COPYRIGHT © 2003 ALL RIGHTS RESERVED – MURRAY JAY MILLER – AIA ALL DESIGN DRAWINGS AND WRITTEN MATERIAL APPEARING HEREIN CONSTITUTE THE ORIGINAL AND UNPUBLISHED WORK OF THE ARCHITECT AND MAY NOT BE DUPLICATED, USED OR DISCLOSED WITHOUT THE WRITTEN CONSENT OF THE ARCHITECT.

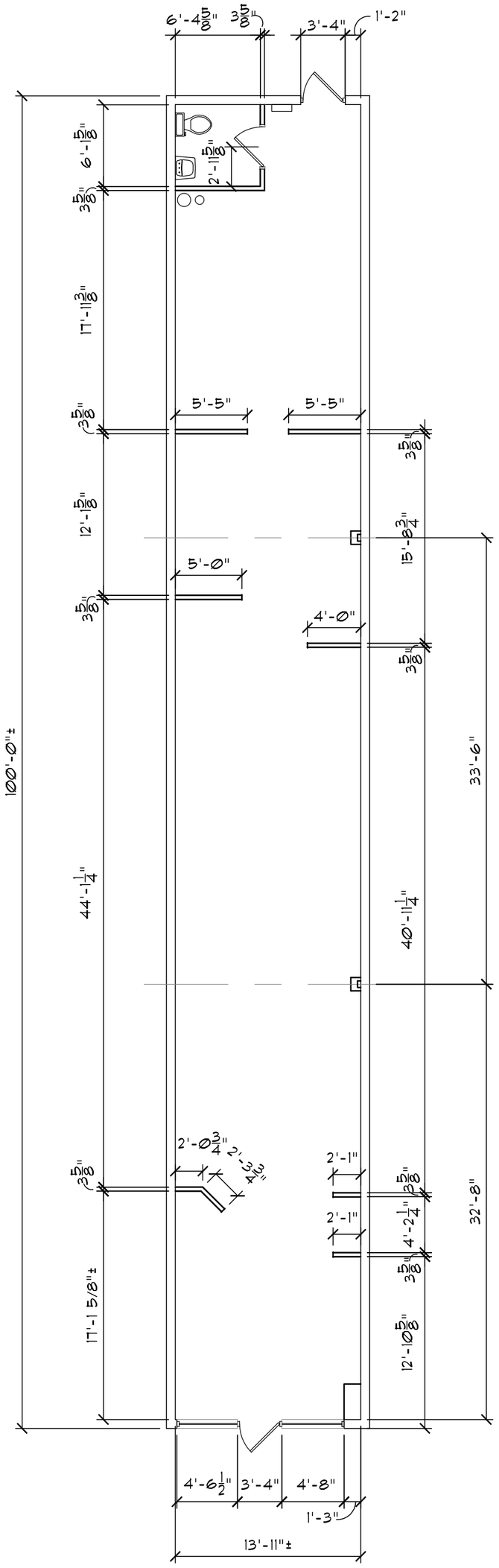

1 / PL-19 SPACE # 19
SCALE: 1/8"=1'-0"

A / PL-19 SPACE # 19
SCALE: 1/8"=1'-0"

Murray Jay Miller
ARCHITECTURE
Suite 300 138 South Main Street Wilkes-Barre, Pennsylvania 18701-1601
(570) 822-4141 Voice (570) 822-4546 Fax mjmarch@epix.net E-mail www.murrayjmiller.com Website

OWNER:
WP REALTY
940 HAVERFORD RD.
BRYN MAWR, PA 19010

EAST END CENTER

X
X

DATE:
July 19, 2006

PROJ. NO:
99033.02

DWG. TITLE:
SPACE # 19
FLOOR PLAN

REVISIONS

NUMBER	DATE	DESCRIPTION

DWG. NO:
PL-19
OF ?